□□□□□□

Lecture #2: Introduction to AI

Offered: 2026-03-06

Jia-Li Yin

Department of Computer Science and Big Data

Fuzhou University, Fuzhou, China

jlyin@fzu.edu.cn

Outline

- Transformer
- Learning/Data/Tasks
- BERT
- BERT Fine-Tuning
- Extensions

LLMs are built out of transformers

- Transformer: a specific kind of network architecture, like a fancier feedforward network, but based on attention

Attention Is All You Need

Ashish Vaswani* Google Brain avaswani@google.com

Noam Shazeer* Google Brain noam@google.com

Niki Parmar* Google Research nikip@google.com

Jakob Uszkoreit* Google Research usz@google.com

Llion Jones* Google Research llion@google.com

Aidan N. Gomez* † University of Toronto aidan@cs.toronto.edu

Łukasz Kaiser* Google Brain lukaszkaiser@google.com

Illia Polosukhin* ‡ illia.polosukhin@gmail.com

Attention

- Consider the embeddings for an individual word from a particular layer

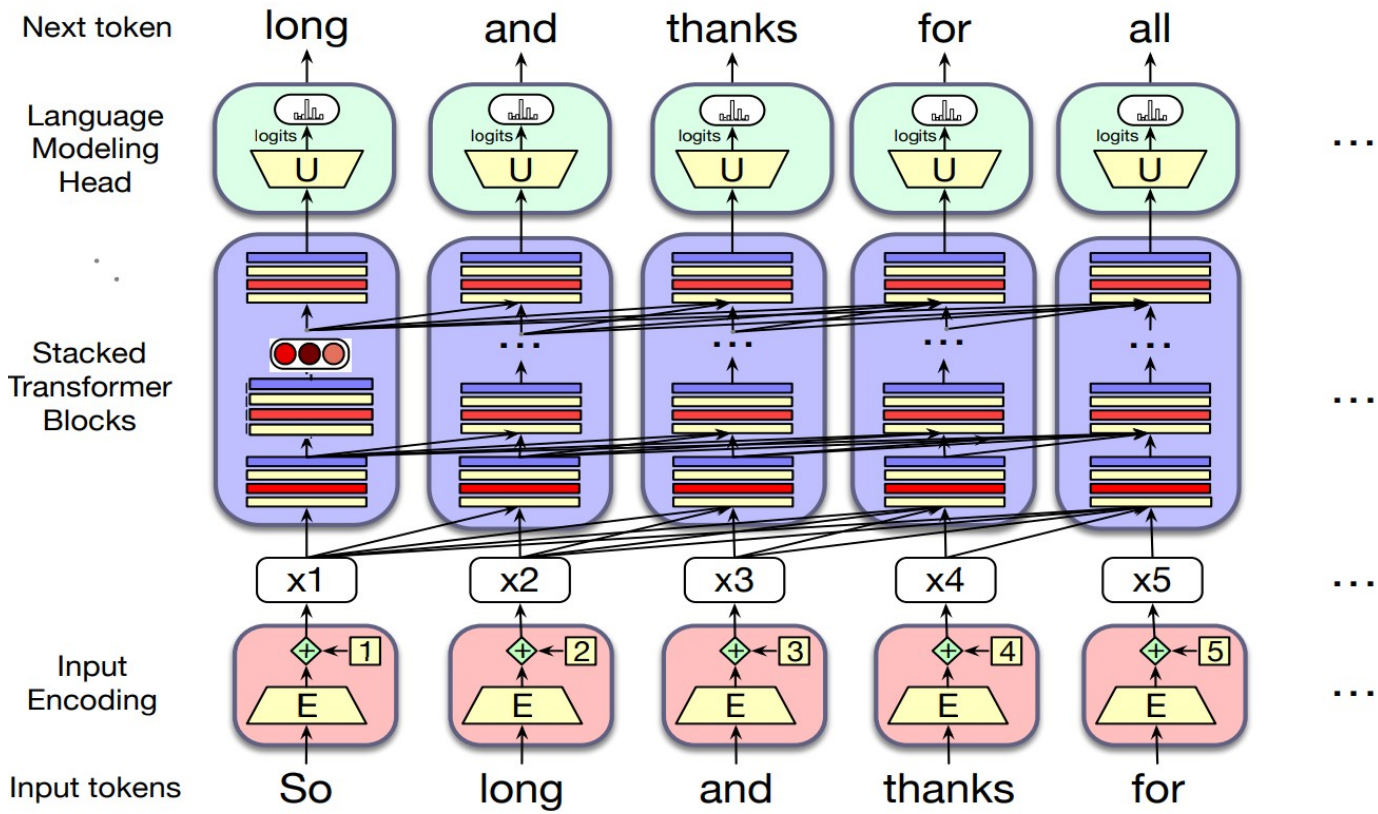

Problem with static embeddings (word2vec)

- They are static! The embedding for a word doesn't reflect how its meaning changes in context.

The chicken didn't cross the road because it was too tired

- What is the meaning represented in the static embedding for "it"?

Contextual Embeddings

- Intuition: a representation of meaning of a word should be different in different contexts!
- Contextual Embedding: each word has a different vector that expresses different meanings depending on the surrounding words
- How to compute contextual embeddings?
- Attention

Contextual Embeddings

- Build up the contextual embedding from a word by selectively integrating information from all the neighboring words We say that a word "attends to" some neighboring words more than others

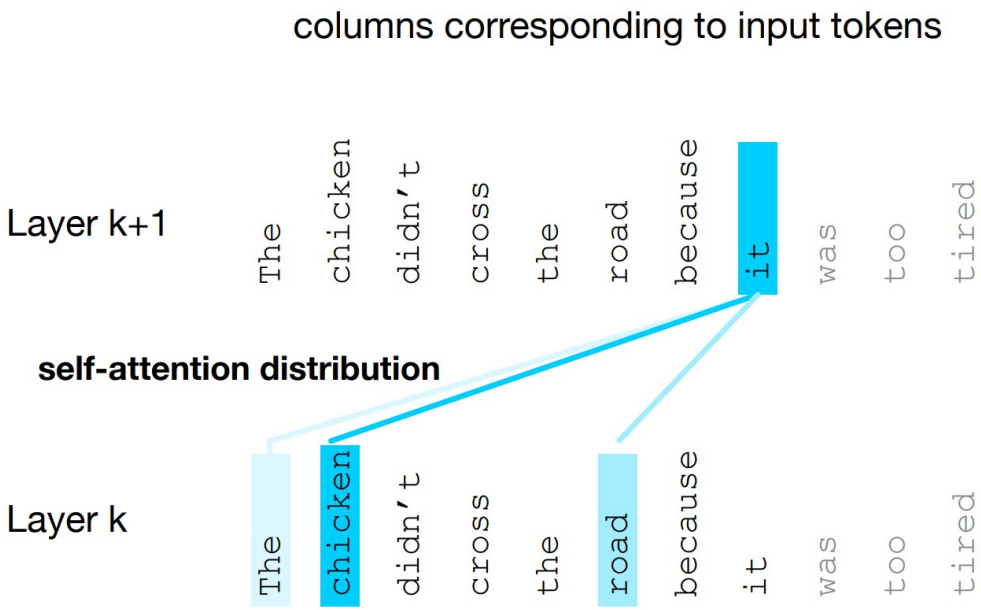

Attention definition

- A mechanism for helping compute the embedding for a token by selectively attending to and integrating information from surrounding tokens (at the previous layer).

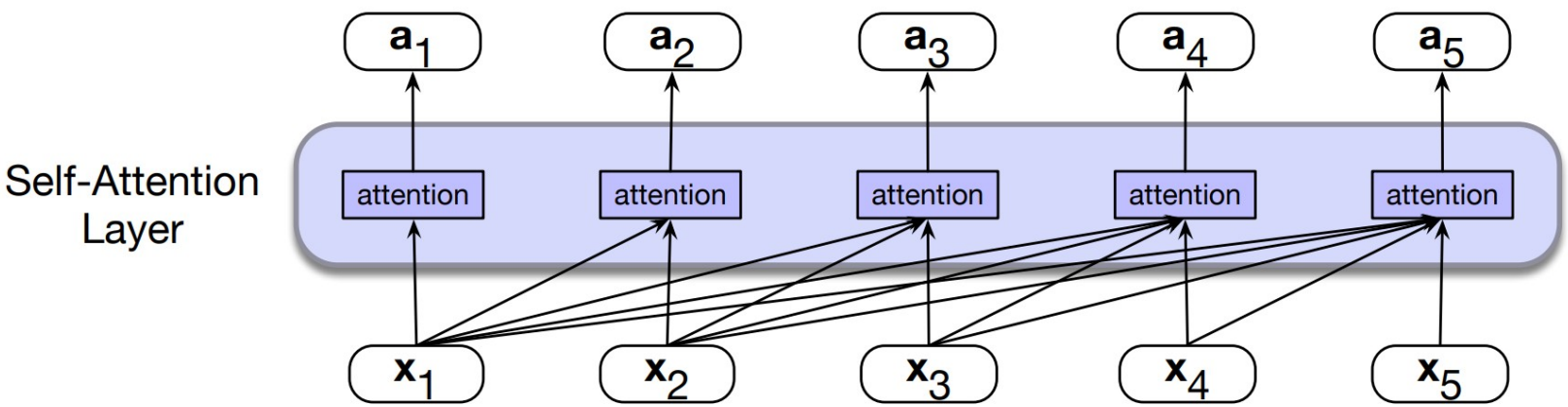

Attention definition

- Given a sequence of token embeddings:

$$\mathbf{x}_1 \quad \mathbf{x}_2 \quad \mathbf{x}_3 \quad \mathbf{x}_4 \quad \mathbf{x}_5 \quad \mathbf{x}_6 \quad \mathbf{x}_7 \quad \mathbf{x}_i$$

Produce: $\mathbf{a}_i$ = a weighted sum of $\mathbf{x}_1$ through $\mathbf{x}_7$ (and $\mathbf{x}_i$)
Weighted by their similarity to $\mathbf{x}_i$

$$\text{score}(\mathbf{x}_i, \mathbf{x}_j) = \mathbf{x}_i \cdot \mathbf{x}_j$$

$$\alpha_{ij} = \text{softmax}(\text{score}(\mathbf{x}_i, \mathbf{x}_j)) \ \forall j \leq i$$

$$\mathbf{a}_i = \sum_{j \leq i} \alpha_{ij} \mathbf{x}_j$$

Attention definition

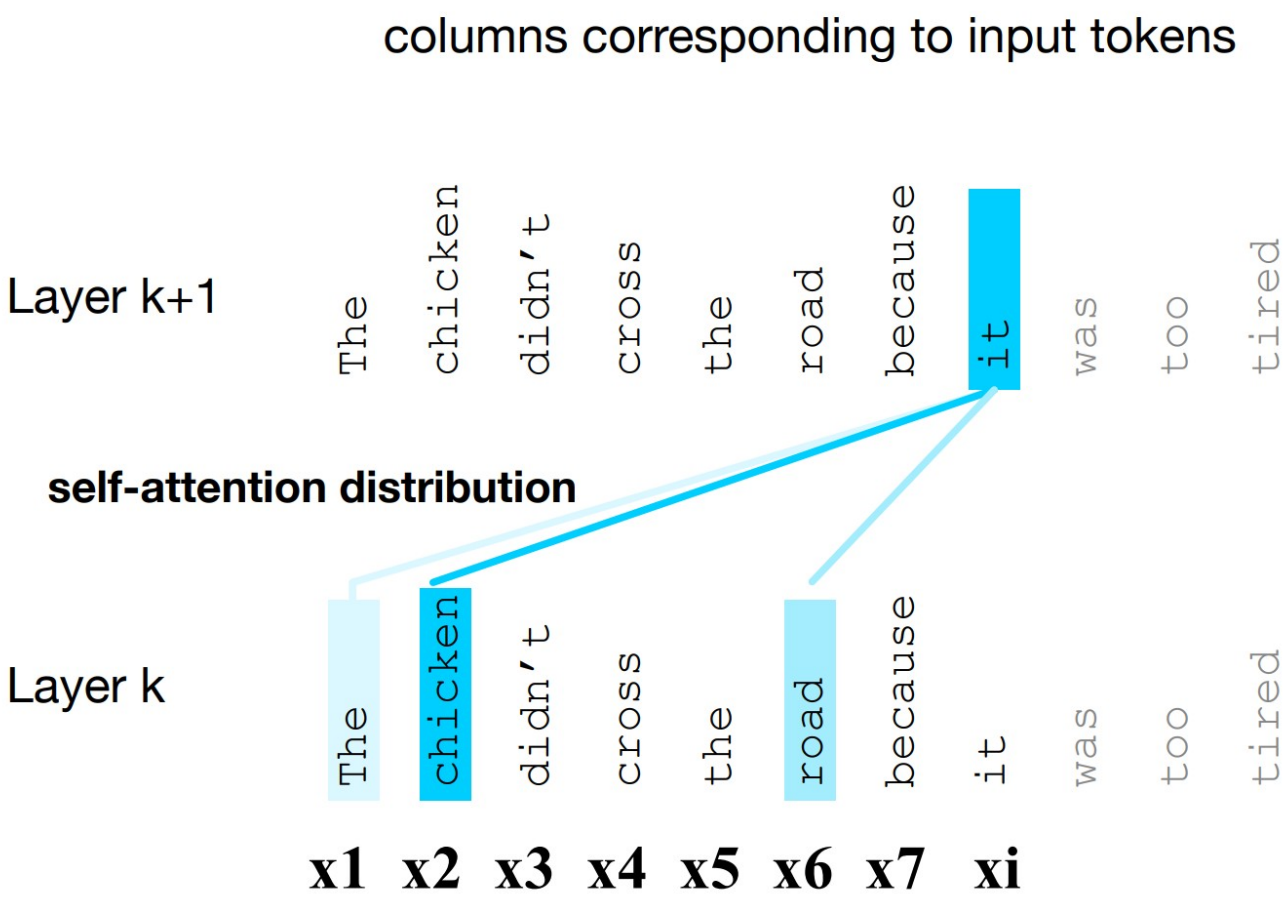

Attention Head

- High-level idea: instead of using vectors (like xi and x4) directly, we'll represent 3 separate roles each vector xi plays:
- **query:** As the current element being compared to the preceding inputs.
- **key:** as a preceding input that is being compared to the current element to determine a similarity
- **value:** a value of a preceding element that gets weighted and summed

Attention Head

Intuition of attention:

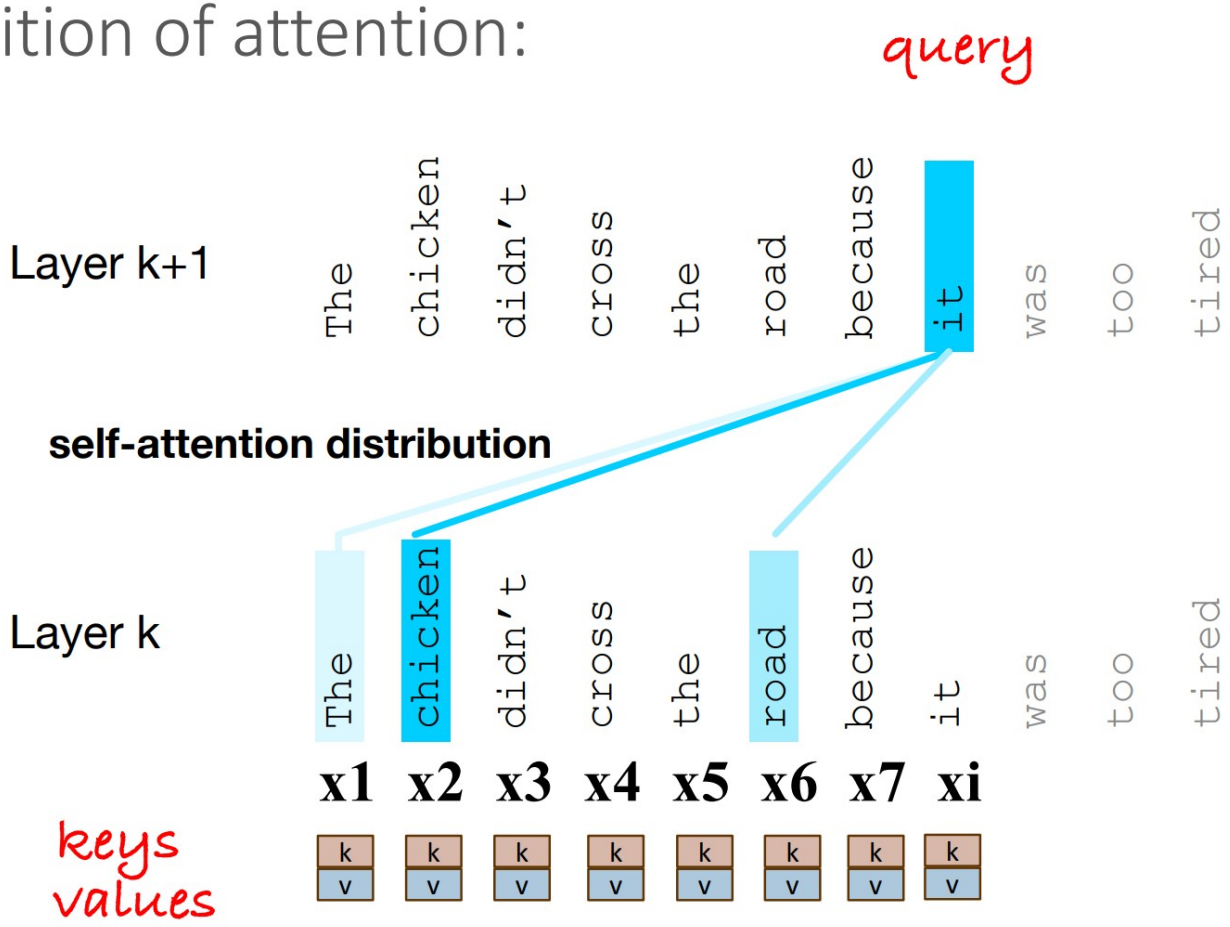

Final equations for one attention head

$$\mathbf{q}_i = \mathbf{x}_i \mathbf{W}^{\mathbf{Q}}; \quad \mathbf{k}_j = \mathbf{x}_j \mathbf{W}^{\mathbf{K}}; \quad \mathbf{v}_j = \mathbf{x}_j \mathbf{W}^{\mathbf{V}}$$

$$\begin{aligned}
\text{score}(\mathbf{x}_i, \mathbf{x}_j) &= \frac{\mathbf{q}_i \cdot \mathbf{k}_j}{\sqrt{d_k}} \\
\alpha_{ij} &= \text{softmax}(\text{score}(\mathbf{x}_i, \mathbf{x}_j)) \;\; \forall j \leq i \\
\mathbf{a}_i &= \sum_{j \leq i} \alpha_{ij} \mathbf{v}_j
\end{aligned}$$

Multi-head attention

- Instead of one attention head, we'll have lots of them
- Intuition: each head might be attending to the context for different purposes
- Different linguistic relationships or patterns in the context

$$
\begin{aligned}
\mathbf{q}_i^c = \mathbf{x}_i \mathbf{W}^{\mathbf{Qc}};\ \ \mathbf{k}_j^c = \mathbf{x}_j \mathbf{W}^{\mathbf{Kc}};\ \ \mathbf{v}_j^c &= \mathbf{x}_j \mathbf{W}^{\mathbf{Vc}};\quad \forall c\ \ 1 \le c \le h \\
\text{score}^c(\mathbf{x}_i, \mathbf{x}_j) &= \frac{\mathbf{q}_i^c \cdot \mathbf{k}_j^c}{\sqrt{d_k}} \\
\alpha_{ij}^c &= \text{softmax}(\text{score}^c(\mathbf{x}_i, \mathbf{x}_j))\ \ \forall j \le i \\
\mathbf{head}_i^c &= \sum_{j \le i} \alpha_{ij}^c \mathbf{v}_j^c \\
\mathbf{a}_i &= (\mathbf{head}^1 \oplus \mathbf{head}^2 \ldots \oplus \mathbf{head}^h)\mathbf{W}^O \\
\text{MultiHeadAttention}(\mathbf{x}_i, [\mathbf{x}_1, \cdots, \mathbf{x}_N]) &= \mathbf{a}_i
\end{aligned}
$$

Transformer Block

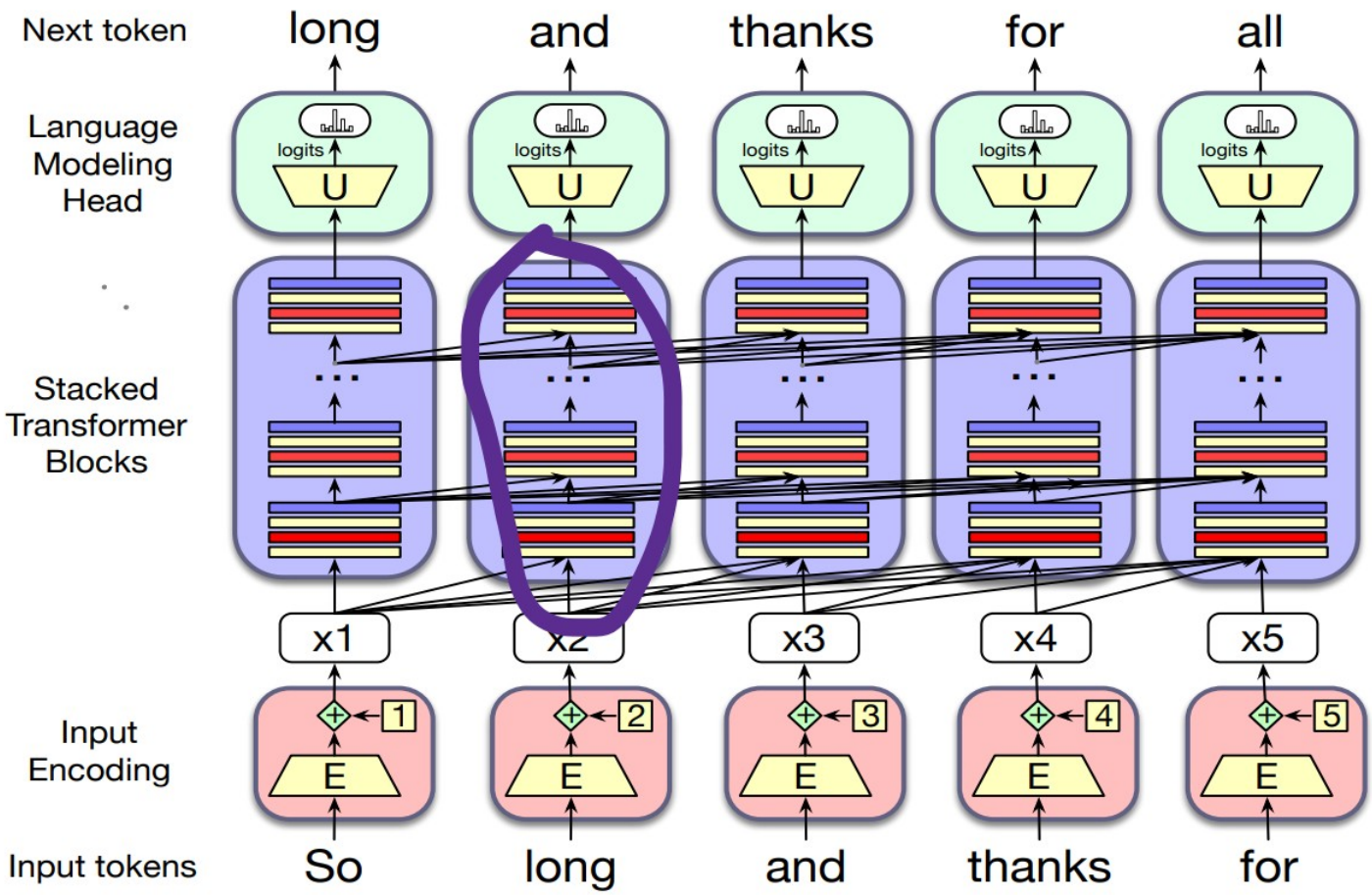

Transformer Block

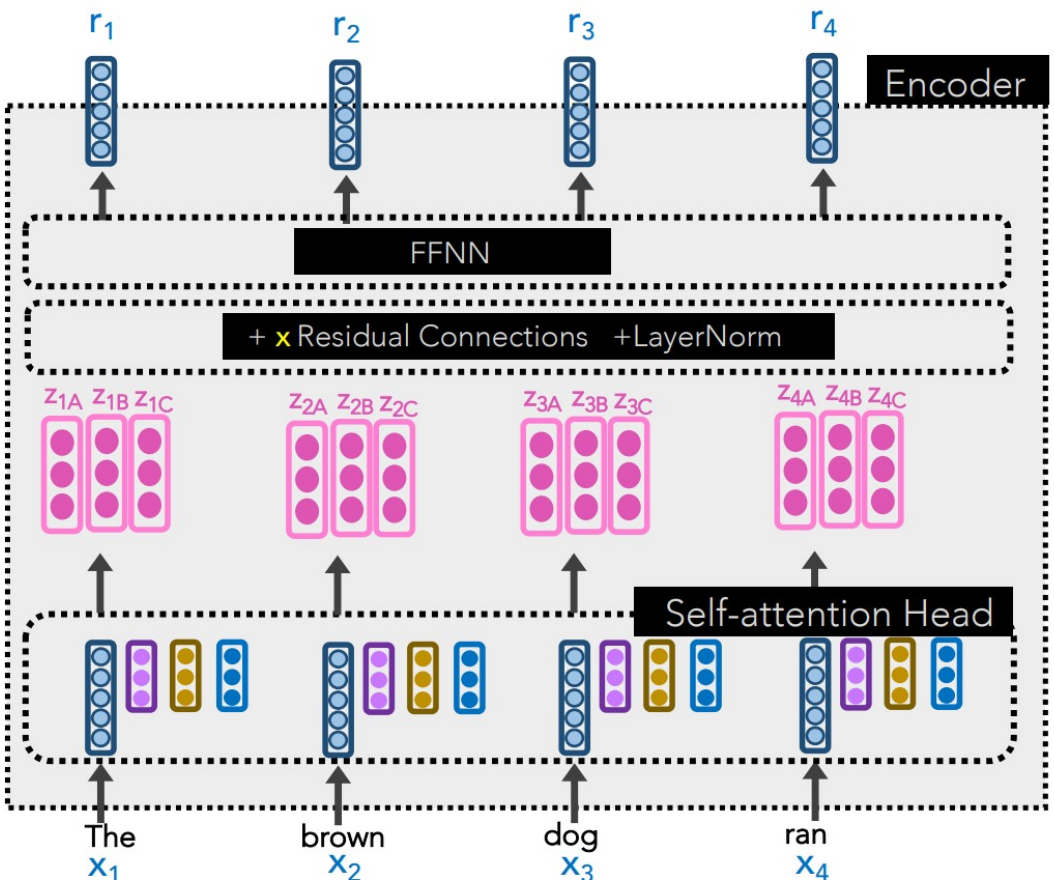

=

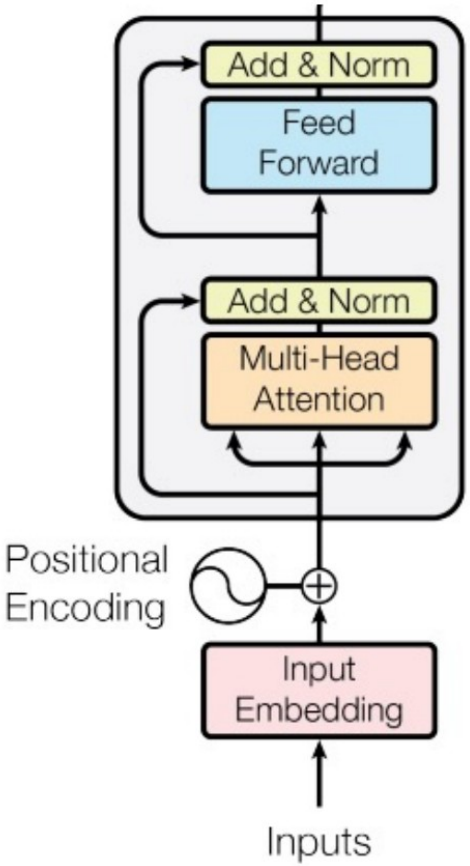

Transformer Decoder

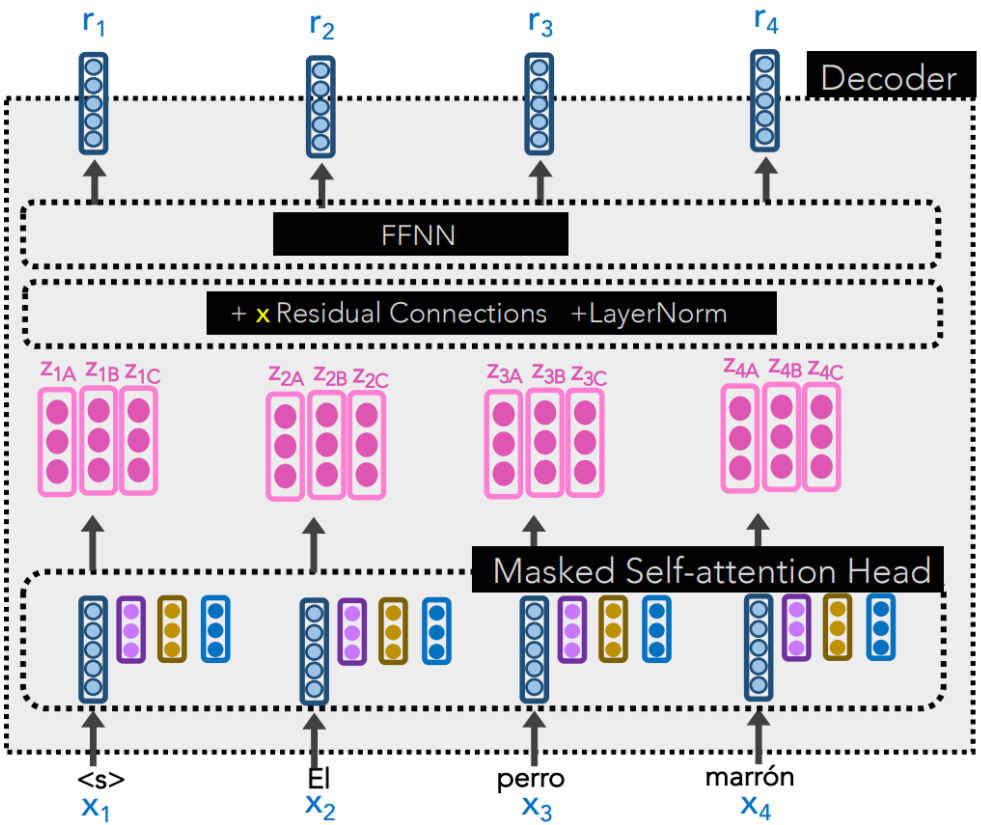

=

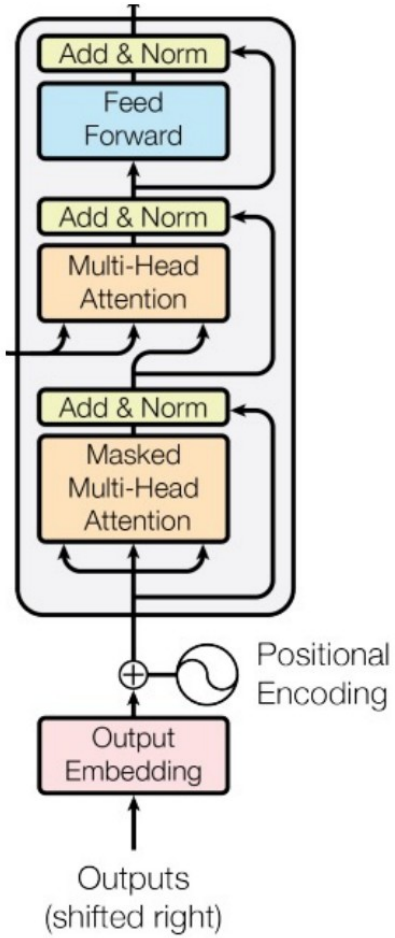

Transformer

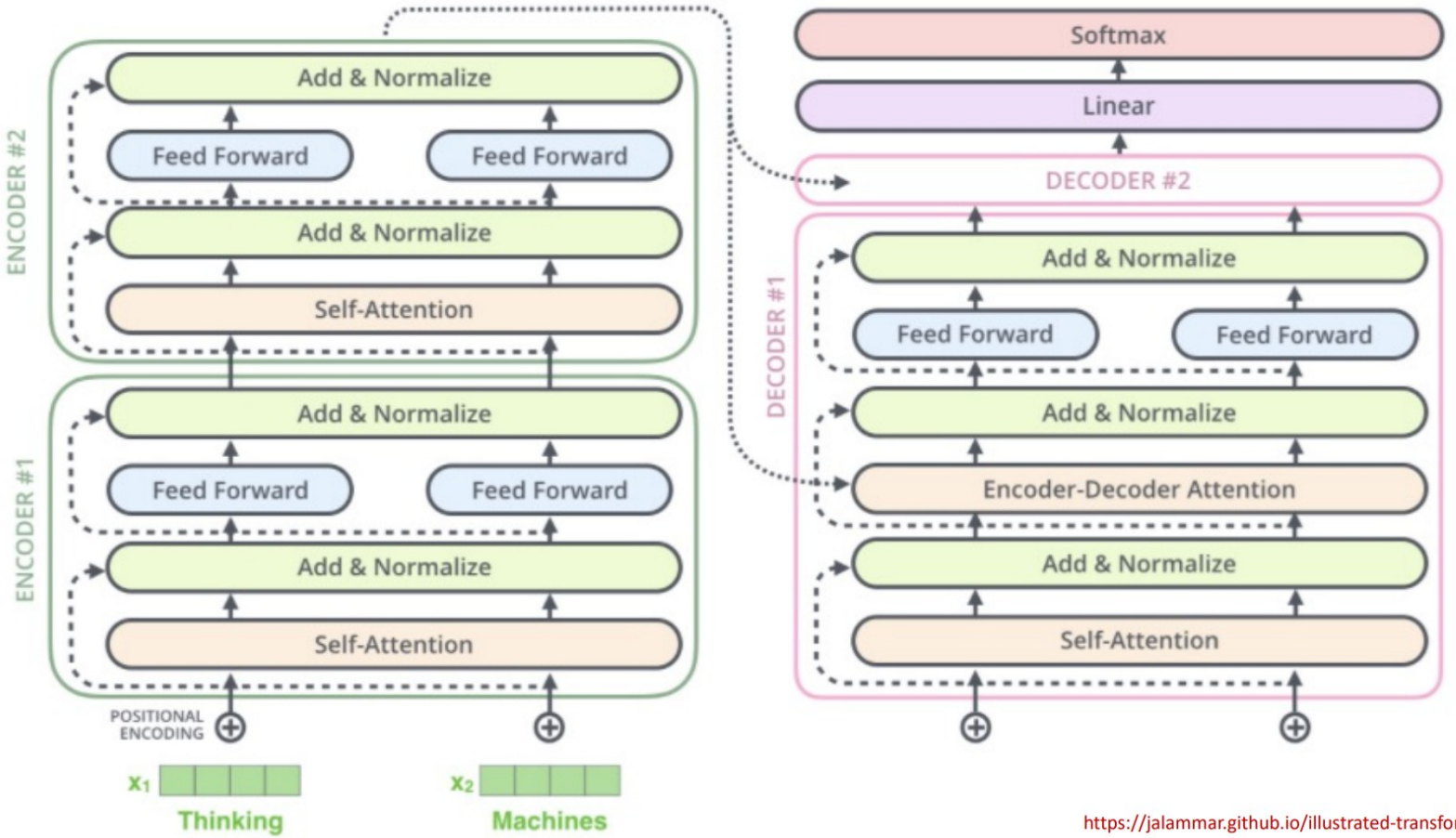

https://jalammar.github.io/illustrated-transformer/

Transformer

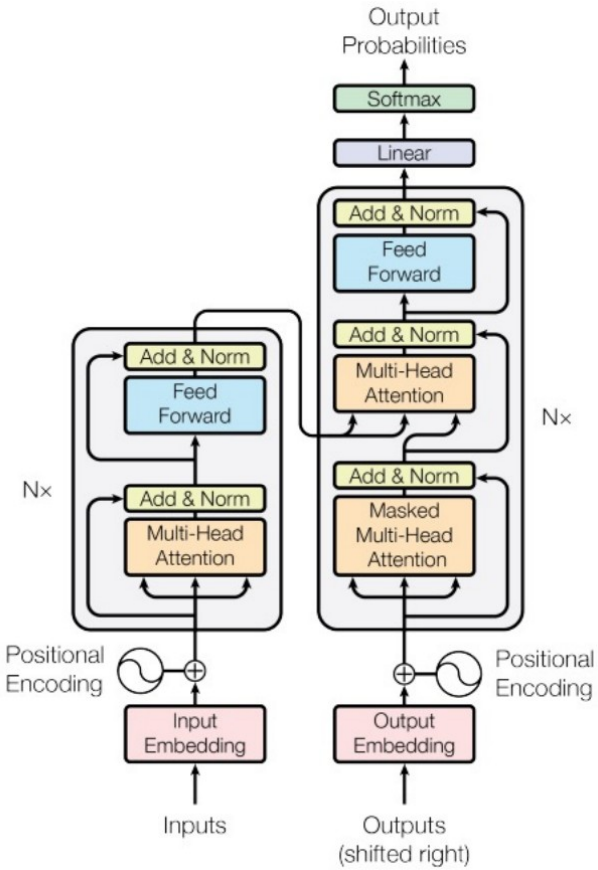

Loss Function: cross-entropy (predicting translated word)

Training Time: ~4 days on (8) GPUs

Layer Type	Complexity per Layer	Sequential Operations	Maximum Path Length
Self-Attention	$O(n^2 \cdot d)$	$O(1)$	$O(1)$
Recurrent	$O(n \cdot d^2)$	$O(n)$	$O(n)$
Convolutional	$O(k \cdot n \cdot d^2)$	$O(1)$	$O(log_k(n))$
Self-Attention (restricted)	$O(r \cdot n \cdot d)$	$O(1)$	$O(n/r)$

Model	BLEU		Training Cost (FLOPs)	
	EN-DE	EN-FR	EN-DE	EN-FR
ByteNet [18]	23.75			
Deep-Att + PosUnk [39]		39.2		$1.0 \cdot 10^{20}$
GNMT + RL [38]	24.6	39.92	$2.3 \cdot 10^{19}$	$1.4 \cdot 10^{20}$
ConvS2S [9]	25.16	40.46	$9.6 \cdot 10^{18}$	$1.5 \cdot 10^{20}$
MoE [32]	26.03	40.56	$2.0 \cdot 10^{19}$	$1.2 \cdot 10^{20}$
Deep-Att + PosUnk Ensemble [39]		40.4		$8.0 \cdot 10^{20}$
GNMT + RL Ensemble [38]	26.30	41.16	$1.8 \cdot 10^{20}$	$1.1 \cdot 10^{21}$
ConvS2S Ensemble [9]	26.36	**41.29**	$7.7 \cdot 10^{19}$	$1.2 \cdot 10^{21}$
Transformer (base model)	27.3	38.1	$\mathbf{3.3 \cdot 10^{18}}$	
Transformer (big)	**28.4**	**41.8**	$2.3 \cdot 10^{19}$	

Transformer

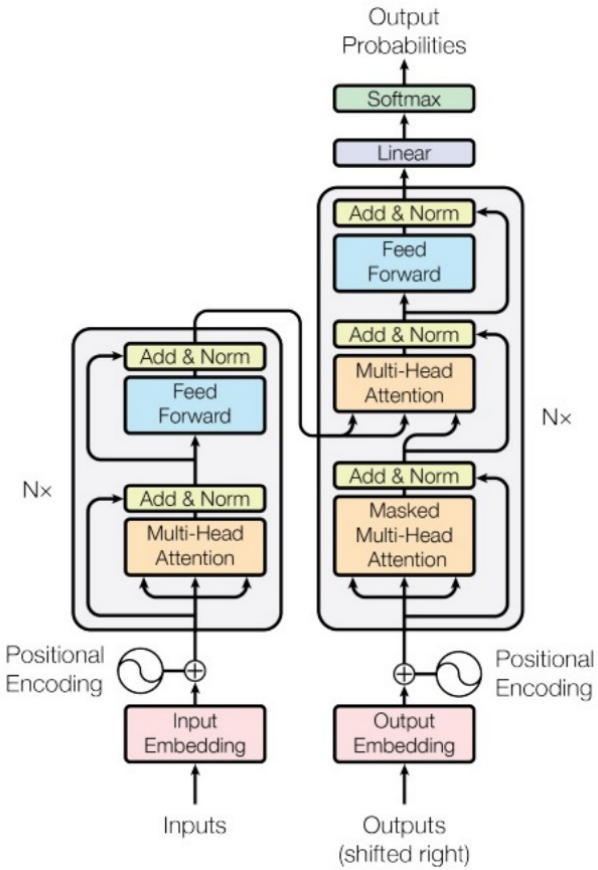

Loss Function: cross-entropy (predicting translated word)

Training Time: ~4 days on (8) GPUs

Layer Type	Complexity per Layer	Sequential Operations	Maximum Path Length
Self-Attention	$O(n^2 \cdot d)$	$O(1)$	$O(1)$
Recurrent	$O(n \cdot d^2)$	$O(n)$	$O(n)$
Convolutional	$O(k \cdot n \cdot d^2)$	$O(1)$	$O(log_k(n))$
Self-Attention (restricted)	$O(r \cdot n \cdot d)$	$O(1)$	$O(n/r)$

Model	BLEU		Training Cost (FLOPs)	
	EN-DE	EN-FR	EN-DE	EN-FR
ByteNet [18]	23.75			
Deep-Att + PosUnk [39]		39.2		$1.0 \cdot 10^{20}$
GNMT + RL [38]	24.6	39.92	$2.3 \cdot 10^{19}$	$1.4 \cdot 10^{20}$
ConvS2S [9]	25.16	40.46	$9.6 \cdot 10^{18}$	$1.5 \cdot 10^{20}$
MoE [32]	26.03	40.56	$2.0 \cdot 10^{19}$	$1.2 \cdot 10^{20}$
Deep-Att + PosUnk Ensemble [39]		40.4		$8.0 \cdot 10^{20}$
GNMT + RL Ensemble [38]	26.30	41.16	$1.8 \cdot 10^{20}$	$1.1 \cdot 10^{21}$
ConvS2S Ensemble [9]	26.36	**41.29**	$7.7 \cdot 10^{19}$	$1.2 \cdot 10^{21}$
Transformer (base model)	27.3	38.1	$\mathbf{3.3 \cdot 10^{18}}$	
Transformer (big)	**28.4**	**41.8**	$2.3 \cdot 10^{19}$	

BERT

- Bidirectional Encoder Representations from Transformers
- Many deep learning models, including pre-trained ones with cute names
- (e.g., ELMo, BERT, ALBERT, GPT-3), refer to an exact combination of:
- • The model’s architecture
- • The training objective to pre-train (e.g., MLM prediction)
- • The data (e.g., Google BooksCorpus, Wikipedia)
- Many people abuse the terms and swap out components.

BERT

- Model: several Transformer Encoders. Input sentence or sentence pairs, [CLS] token, subword embeddings
- Objective: MLM and next-sentence prediction
- Data: BooksCorpus and Wikipedia
- BERT has 2 training objectives:
- 1. Predict the Masked word (a la CBOW)
  - 15% of all input words are randomly masked.
  - 80% become [MASK]
  - 10% become revert back
  - 10% become are deliberately corrupted as wrong woru

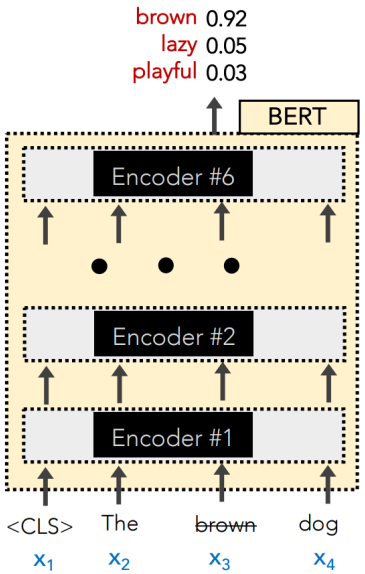

BERT

- BERT has 2 training objectives:
- 2. Two sentences are fed in at a time. Predict the if the
- second sentence of input truly follows the first one or not.

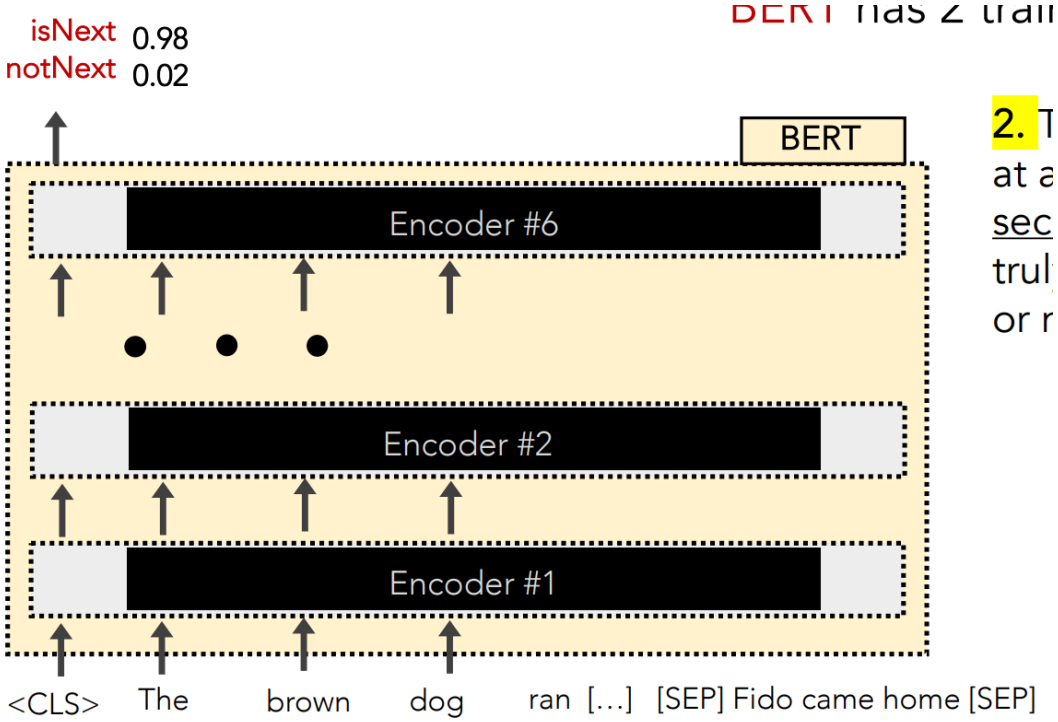

BERT

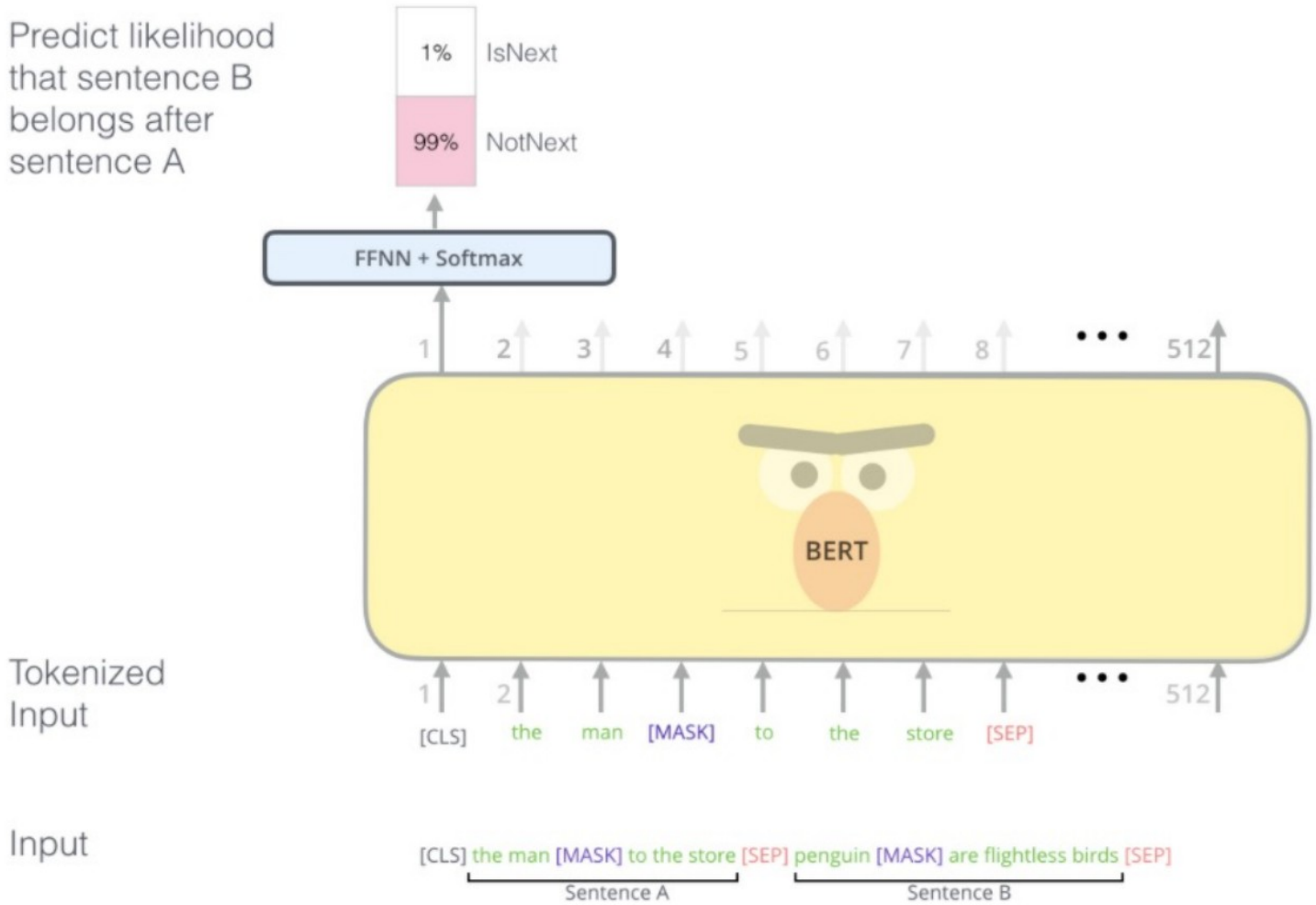
Predict likelihood that sentence B belongs after sentence A
1%
IsNext
99%
NotNext
FFNN + Softmax
1
2
3
4
5
6
7
8
512
BERT
Tokenized Input
[CLS]
the
man
[MASK]
to
the
store
[SEP]
Input
[CLS] the man [MASK] to the store [SEP] penguin [MASK] are flightless birds [SEP]
Sentence A
Sentence B

BERT

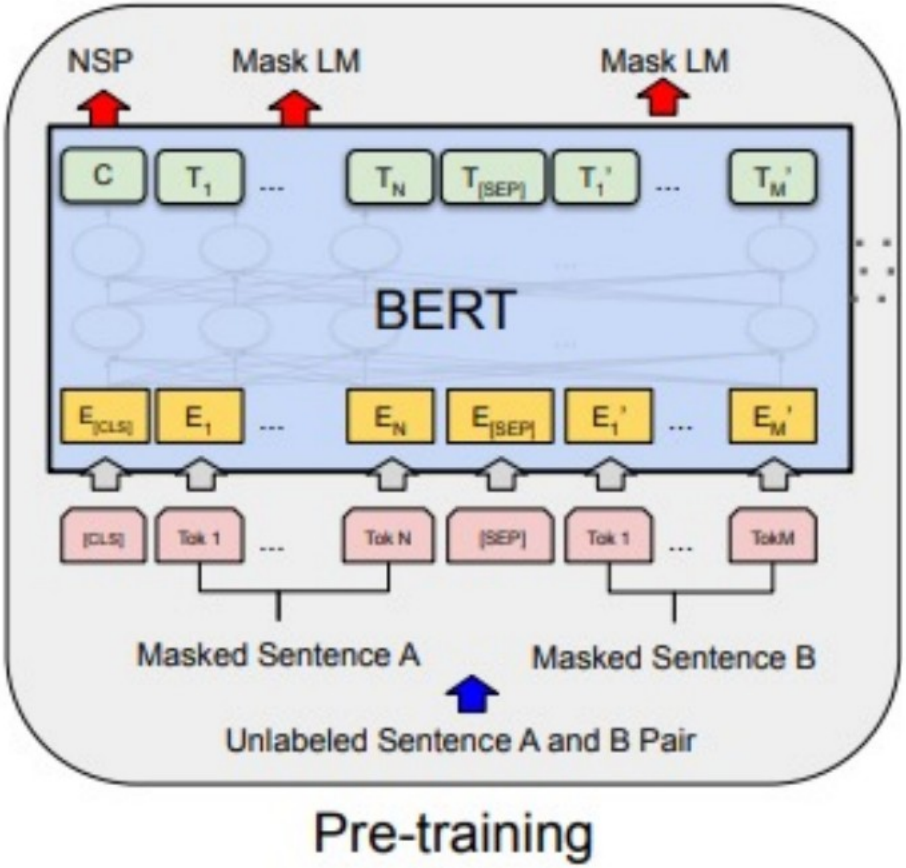

- The two sentences are separated by a token.
- 50% of the time, the 2nd sentence is a randomly selected sentence from the corpus.
- 50% of the time, it truly follows the first sentence in the corpus.

BERT’s inputs

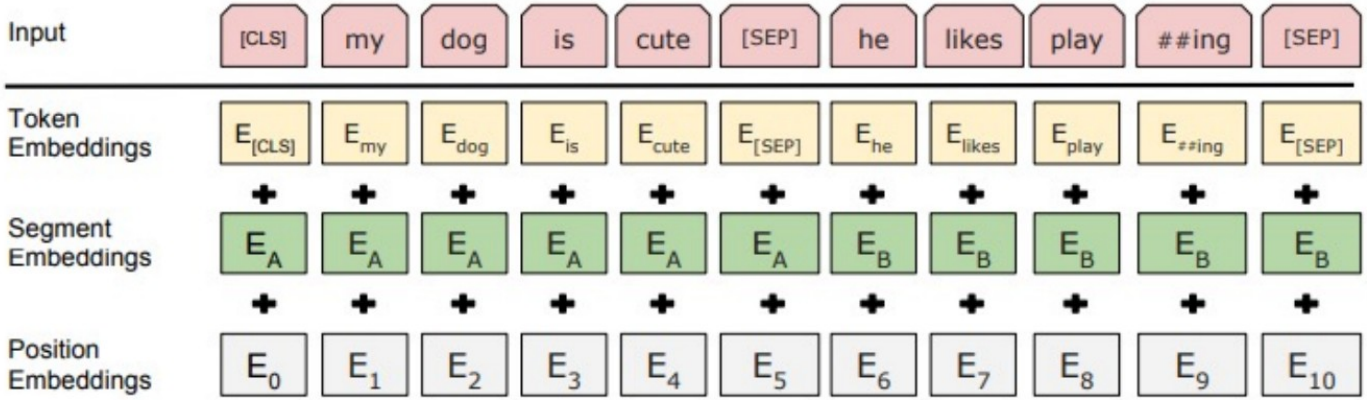

Figure 2: BERT input representation. The input embeddings are the sum of the token embeddings, the segmentation embeddings and the position embeddings.

BERT fine-tuning

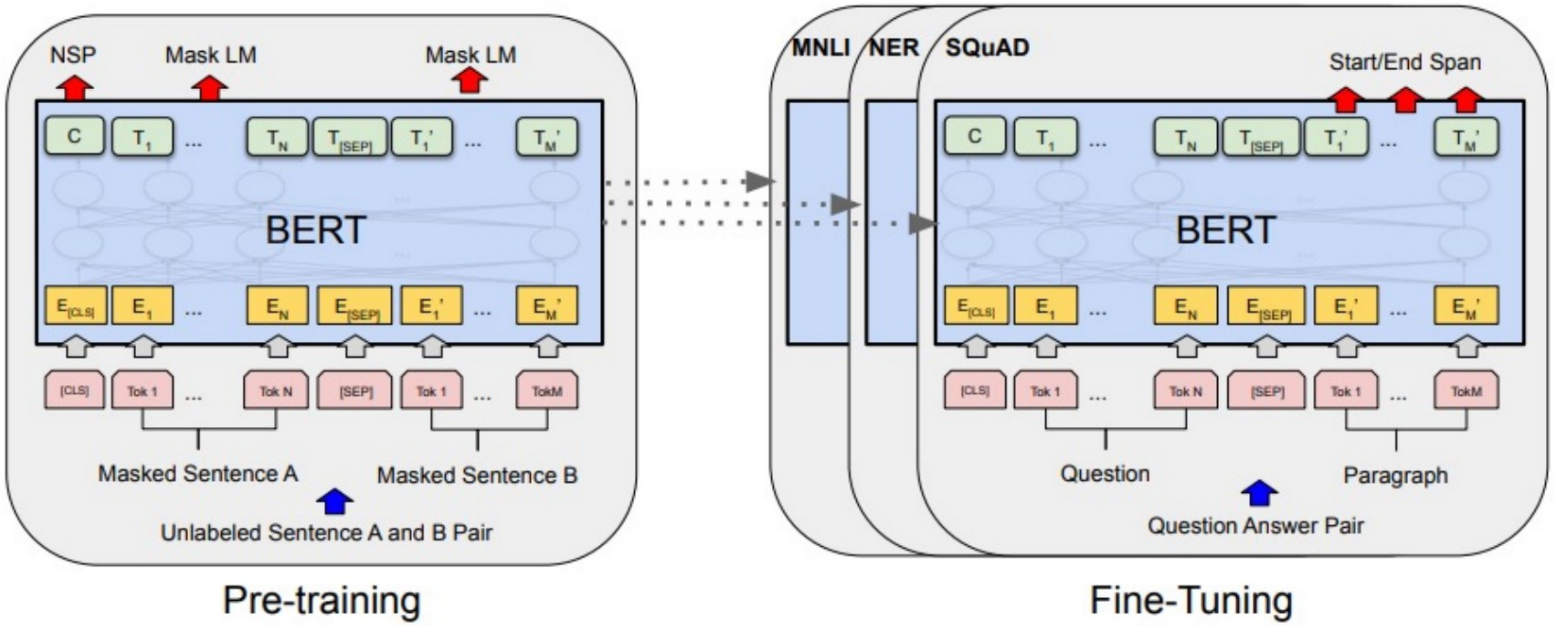

Figure 1: Overall pre-training and fine-tuning procedures for BERT. Apart from output layers, the same architectures are used in both pre-training and fine-tuning. The same pre-trained model parameters are used to initialize models for different down-stream tasks. During fine-tuning, all parameters are fine-tuned. [CLS] is a special symbol added in front of every input example, and [SEP] is a special separator token (e.g. separating questions/answers).

https://aclanthology.org/N19-1423.pdf

BERT fine-tuning

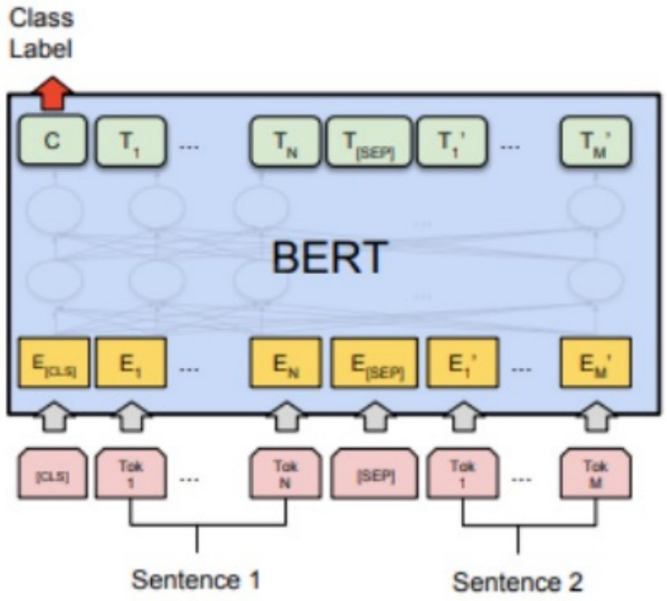

(a) Sentence Pair Classification Tasks: MNLI, QQP, QNLI, STS-B, MRPC, RTE, SWAG

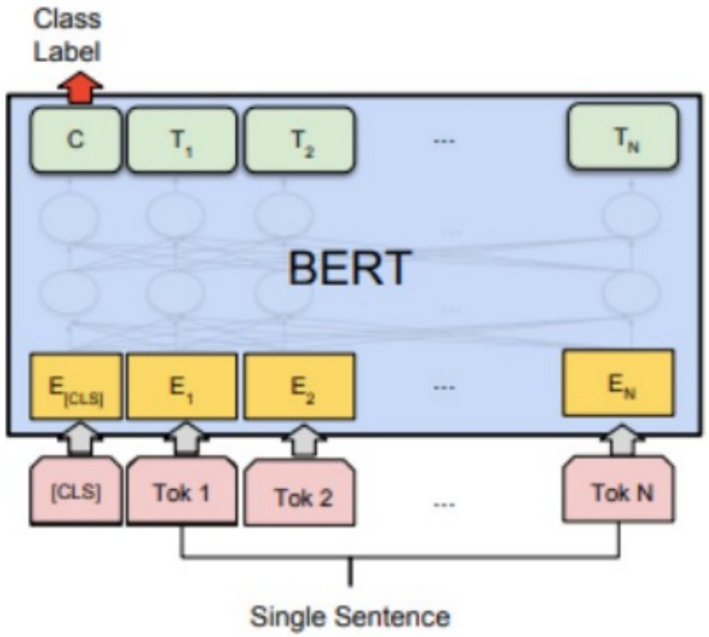

(b) Single Sentence Classification Tasks: SST-2, CoLA

BERT fine-tuning

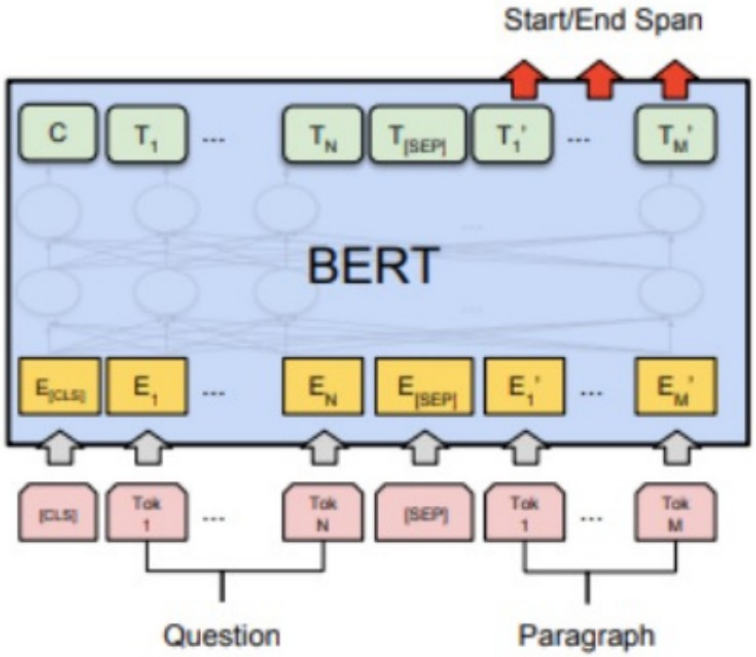

(c) Question Answering Tasks:
SQuAD v1.1

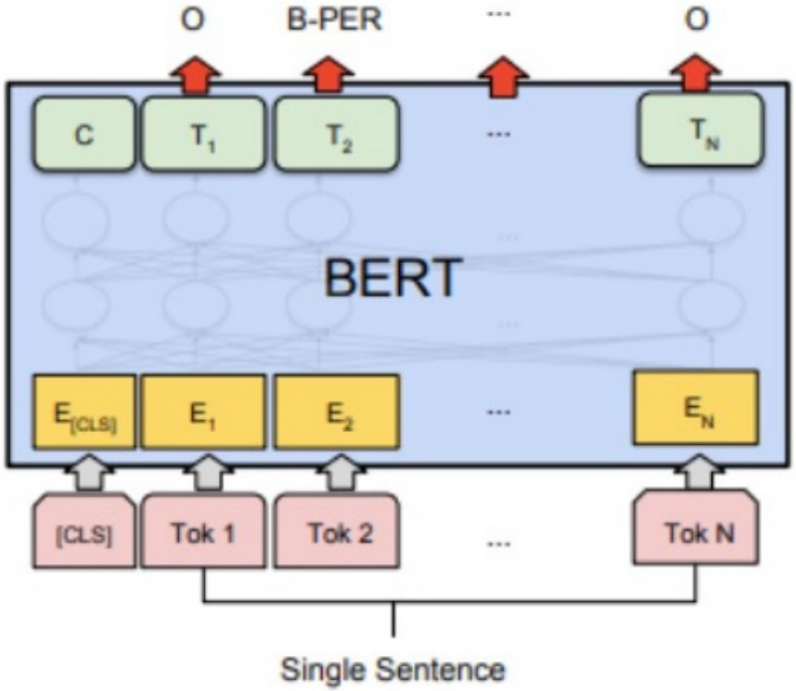

(d) Single Sentence Tagging Tasks:
CoNLL-2003 NER

Extensions

- Transformer-Encoders
- • BERT
- • ALBERT (A Lite BERT …)
- • RoBERTa (A Robustly Optimized BERT …)
- • DistilBERT (small BERT)
- • ELECTRA (Pre-training Text Encoders as Discriminators not Generators)
- • Longformer (Long-Document Transformer)

Extensions

- Autoregressive
- • GPT (Generative Pre-training)
- • CTRL (Conditional Transformer LM for Controllable Generation)
- • Reformer
- • XLNet

Extensions

- DeepSeek

Extensions

- DeepSeek
  - □□□□□□□□□□□□□□□□□□□□□□□□□□
  - □□□□□□□□□□□□□
  - Open AI GPT-1 □ 7000 □□□□□
  - GPT-2 □□□□ 300 □ 000 □□□
  - GPT-3 □□□□ 5000 □ 000 □□□
  - Meta □ Llama2 □□□□ 20000 □ 000 □□

Extensions

- DeepSeek
  - □□□□□□□□□□□□□□□□□□
  - ،

Task Instruction

Definition

"... Given an utterance and recent dialogue context containing past 3 utterances (wherever available), output 'Yes' if the utterance contains the small-talk strategy, otherwise output 'No'. Small-talk is a cooperative negotiation strategy. It is used for discussing topics apart from the negotiation, to build a rapport with the opponent."

Positive Examples

- **Input:** "Context: … *'That's fantastic, I'm glad we came to something we both agree with.'* Utterance: *'Me too. I hope you have a wonderful camping trip.'*"
- **Output:** "Yes"
- **Explanation:** "The participant engages in small talk when wishing their opponent to have a wonderful trip."

Negative Examples

- **Input:** "Context: … *'Sounds good, I need food the most, what is your most needed item?!'* Utterance: *'My item is food too'*."
- **Output:** "Yes"
- **Explanation:** "The utterance only takes the negotiation forward and there is no side talk. Hence, the correct answer is 'No'."

✓ □□□□□

✓ □□□□□□

✓ □□□□□□□

✓ □□□□□□

Extensions
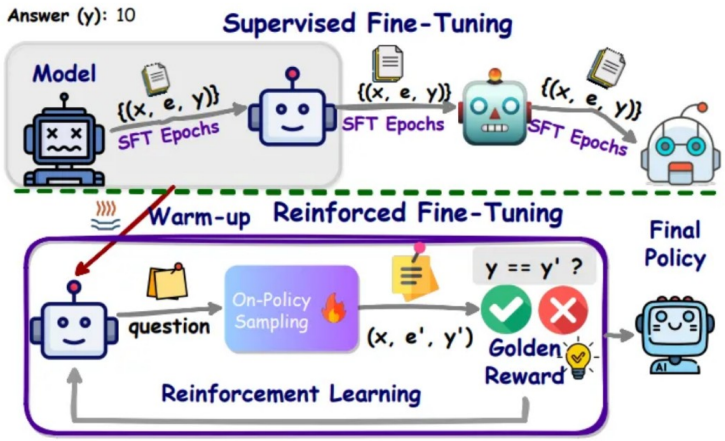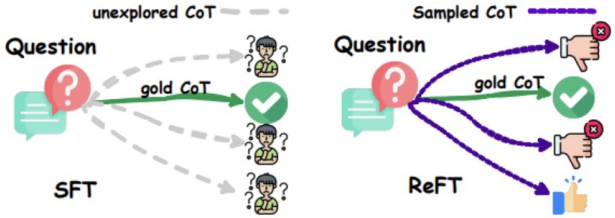
- DeepSeek
  - □□□□□□□□□□□□□□□□□□□□□□□□□□□□□□
  - □□□□□□□□□□□□□□□□□□